DVCP36BP30(N,P)-2
DVCP36BP32(N,P)-2
DVCP36BP70(N,P)-2
DVCP36BP72(N,P)-2
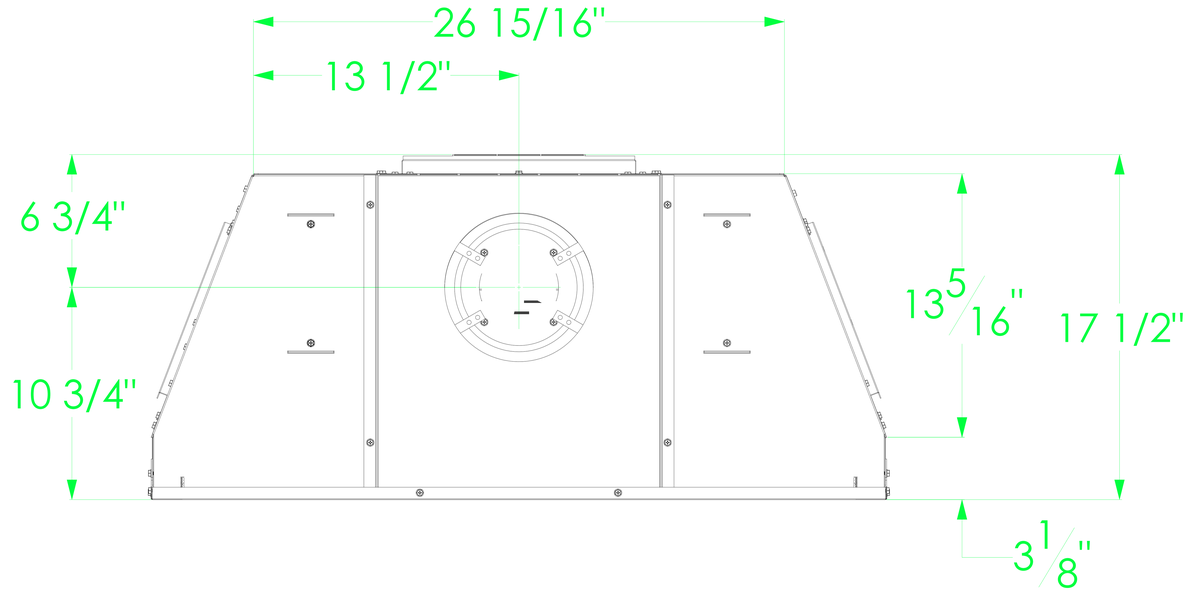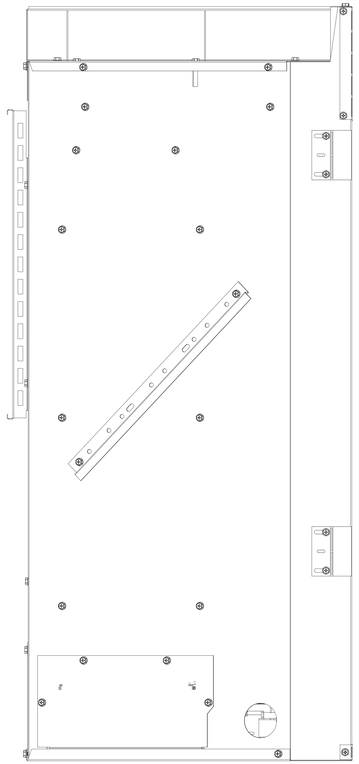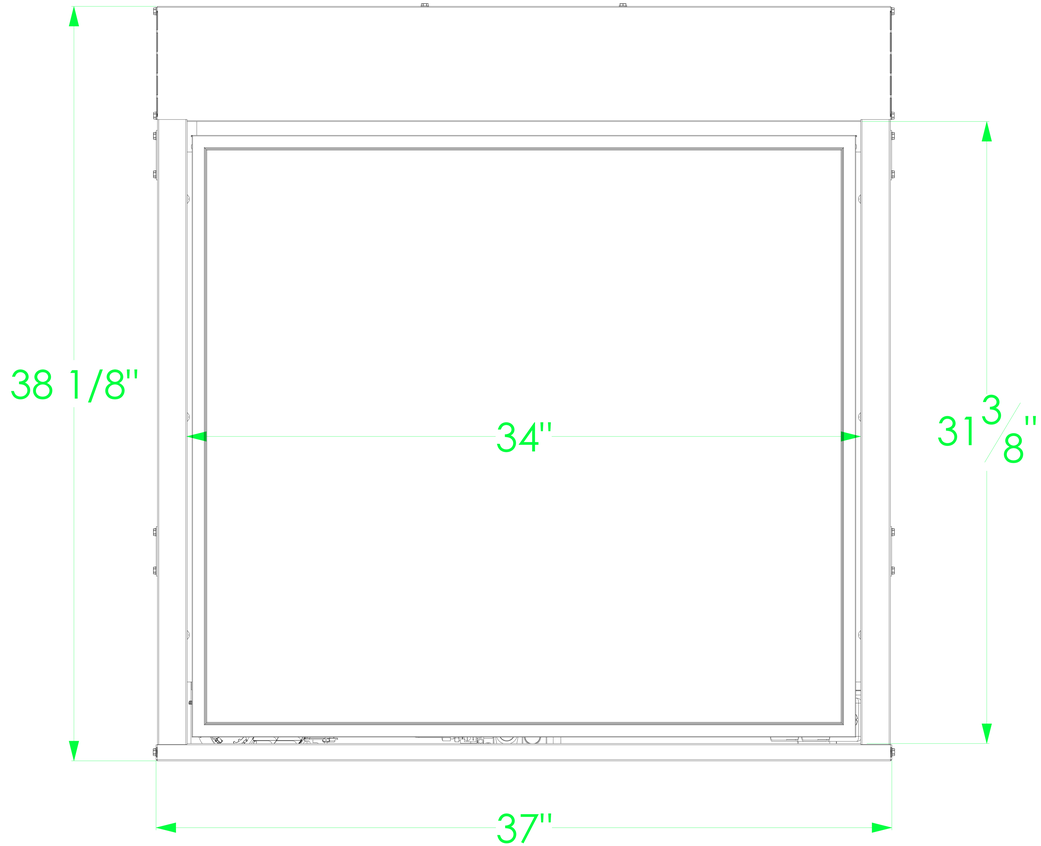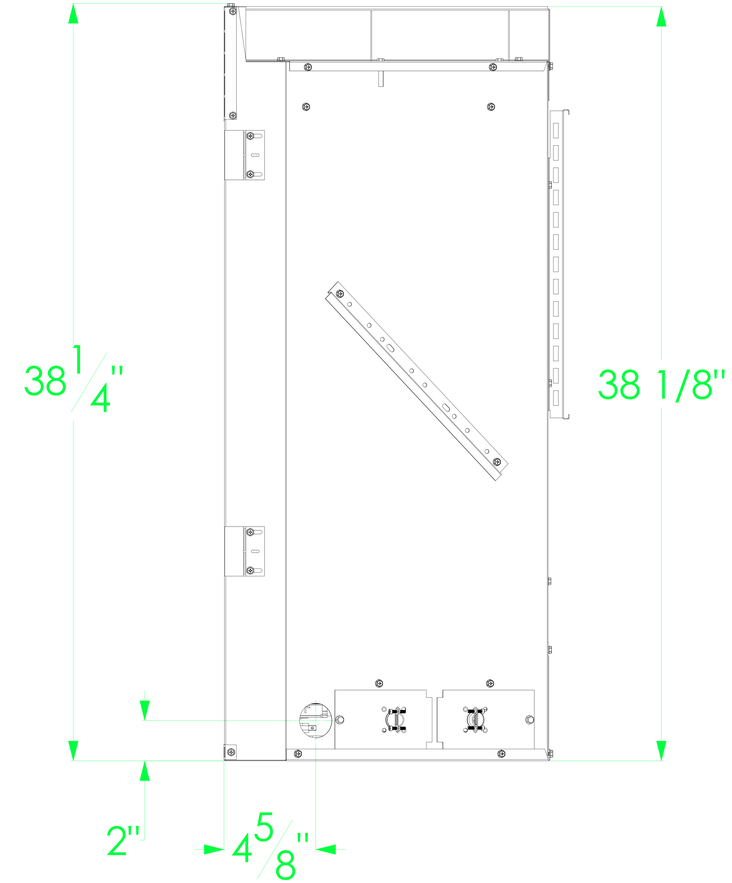
DVCC36BP32(N,P)-2
DVCC36BP72(N,P)-2