DVCP42BP30(N,P)-2
DVCP42BP32(N,P)-2
DVCP42BP70(N,P)-2
DVCP42BP72(N,P)-2
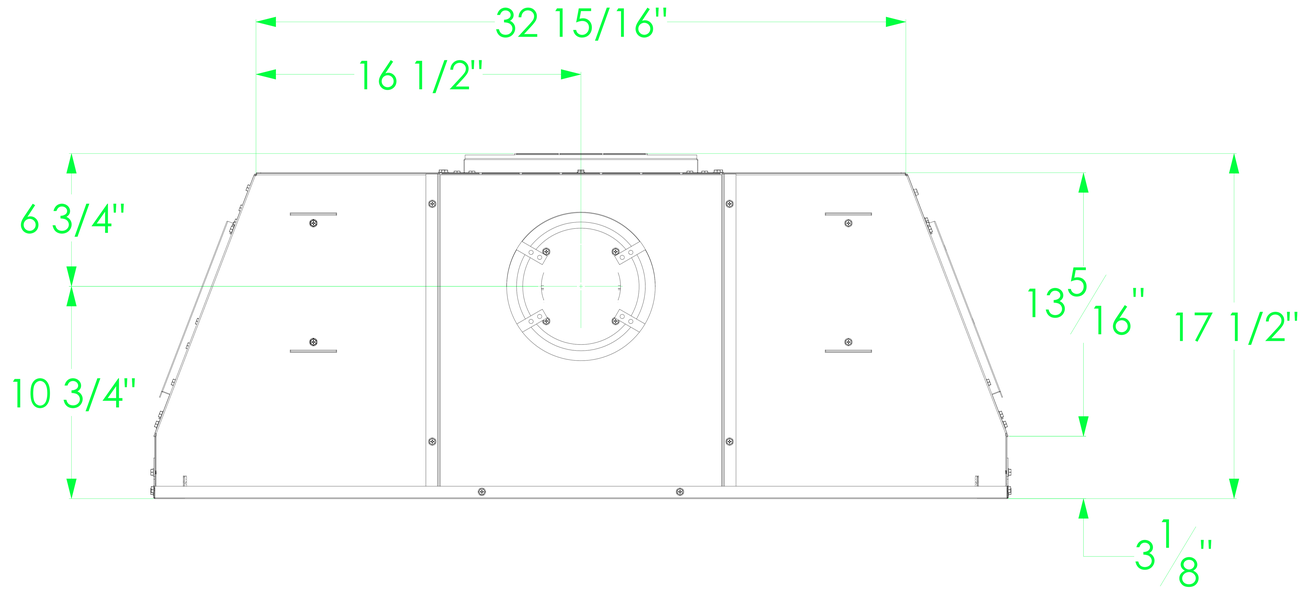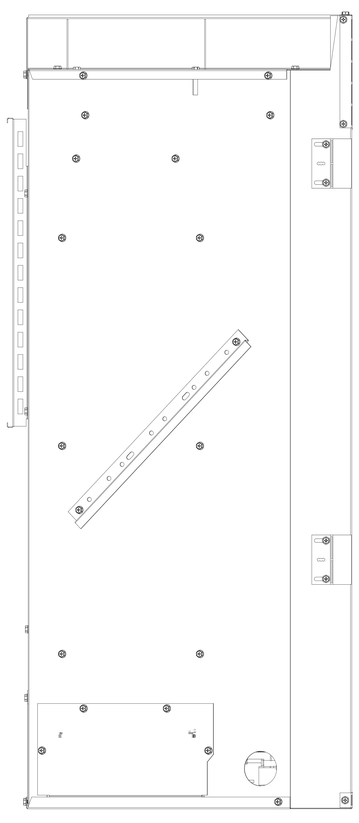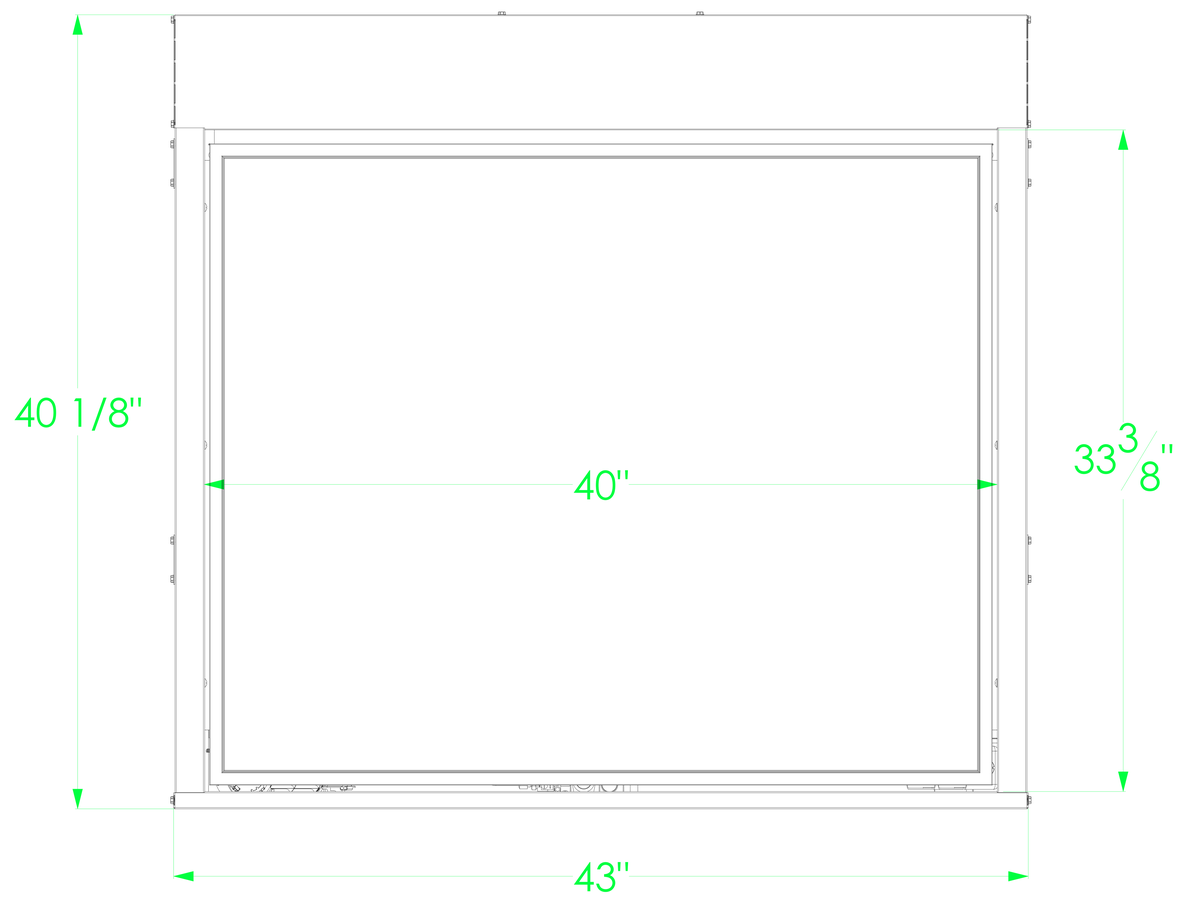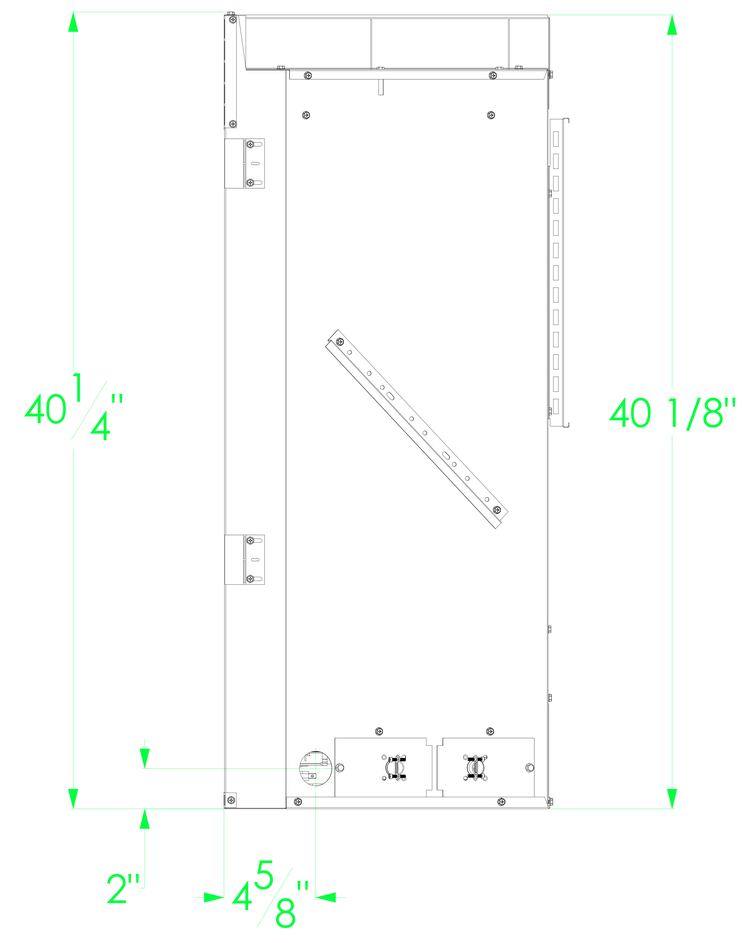
DVCC42BP32(N,P)-2
DVCC42BP72(N,P)-2