Service Parts **MONTANA-36, MONTANA-36H**

36” Outdoor Woodburning Fireplace

Beginning Manufacturing Date: Sept 2003
Ending Manufacturing Date: Active

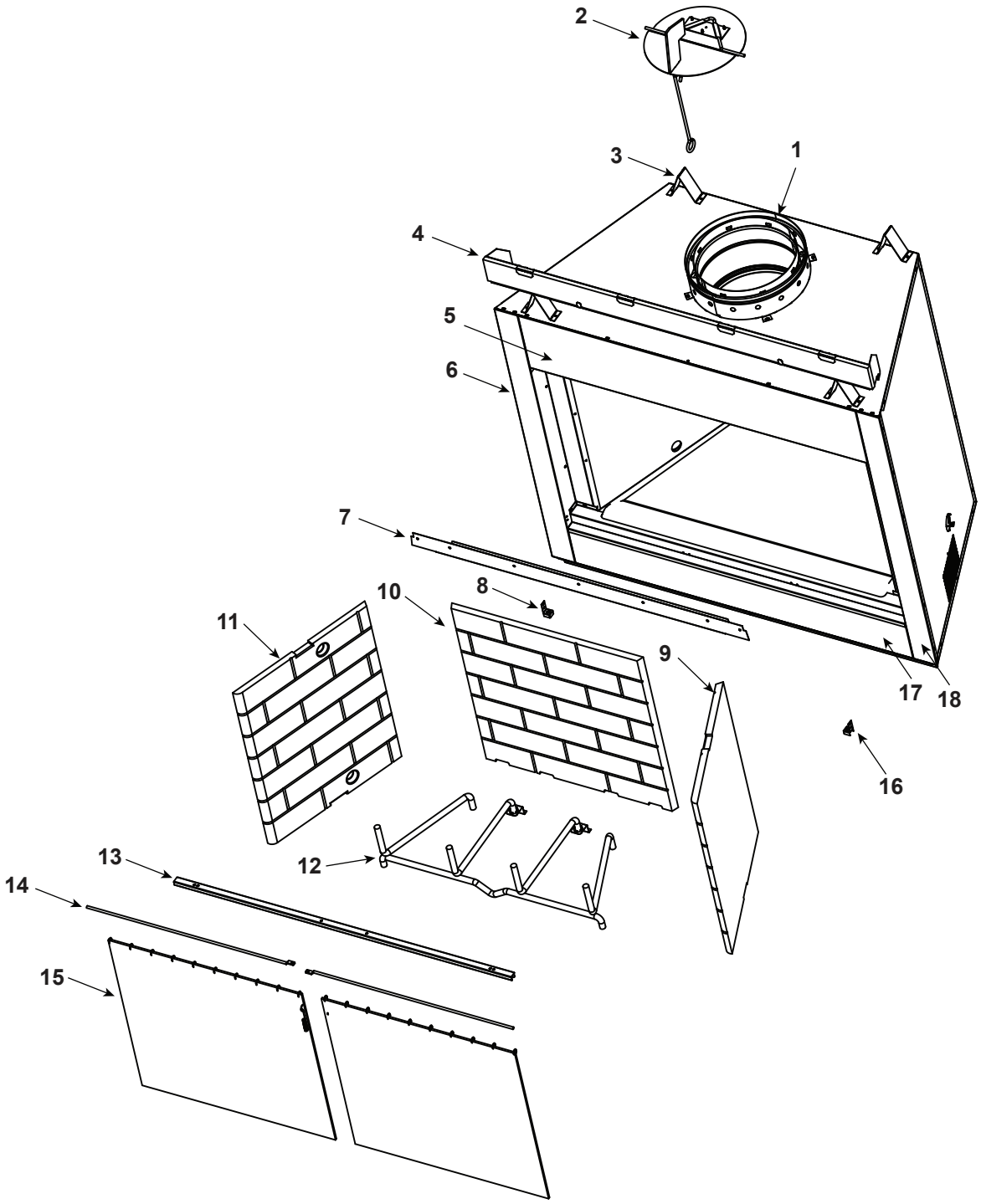

Part number list on following page.

11/21

outdoor lifestyles
by hearth & home technologies®

Service Parts **MONTANA-36, MONTANA-36H**

Beginning Manufacturing Date: Sept 2003
Ending Manufacturing Date: Active

IMPORTANT: THIS IS DATED INFORMATION. Parts must be ordered from a dealer or distributor. **Hearth and Home Technologies does not sell directly to consumers.** Provide model number and serial number when requesting service parts from your dealer or distributor.

ITEM	DESCRIPTION	COMMENTS	PART NUMBER	Stocked in Depot
1	Starter Collar		30399	
2	Damper Assembly		34454	
3	Top Stand Off	Qty 4 Req	SRV4044-111	
4	Non-Comb Board Assembly		SRV4039-132	
5	Upper Front Face	Overlay	4039-114L	
6	Side Column Left	Overlay	30375L	
7	Top Door Track		4039-118	
8	Door Clips	Qty 2 Req	30407	
Traditional Refractory				
9	**Right** Side Refractory		SRV28393	
10	Back Refractory		SRV29992	
11	**Left** Side Refractory		SRV28393	
	Hearth Refractory		SRV29993	
Herringbone Refractory available post week 3/04				
9	**Right** Side Refractory		4010-013	
10	Back Refractory		4010-016	
11	**Left** Side Refractory		4010-014	
	Hearth Refractory		4010-019	
12	Grate		GR33	**Y**
13	Hearth Pan	Pre AK560843	4039-102	
	Hearth Stone Retainer		4039-108	
14	Firescreen Rod	Qry 2 Req	4039-120	
15	Screen Assembly	Qty 2 Req	4039-119	
16	Door Pivet Clip	Qty 2 Req	SRV31527	
17	Bottom Front Face	Overlay	4039-113L	
18	Side column Right	Overlay	30376L	
	Gas Tube		SRV4039-116	
	Smoke Shield		4039-106	
	Air Kit w/box		30416	
	Outside Air Hood	Qty 2 req	SRV33271	
	Nailing Flange	Qty 4 Req	31190	