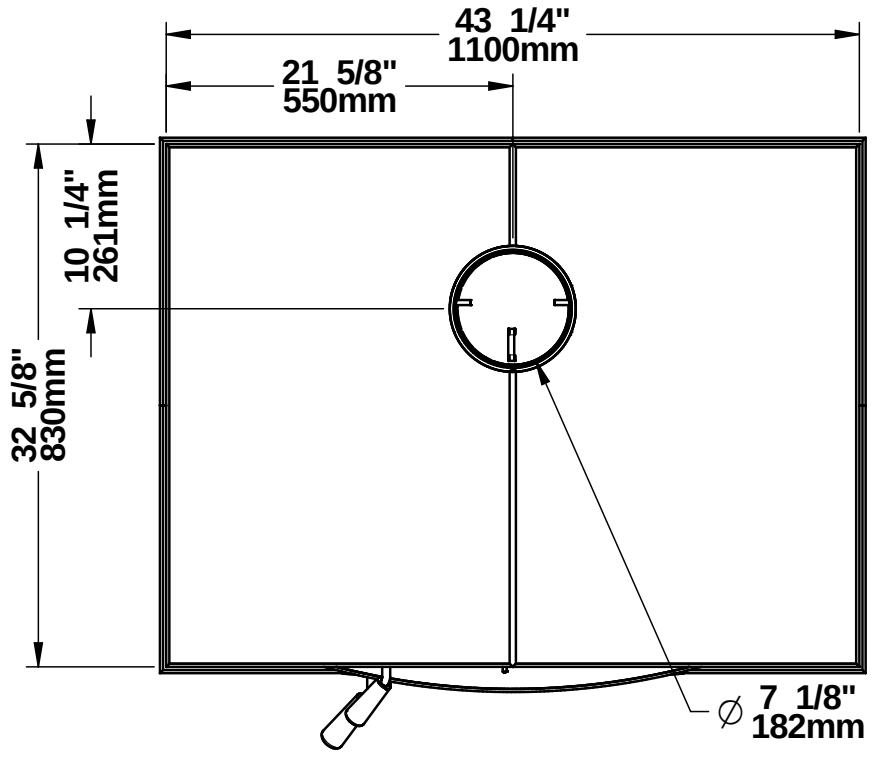
43 1/4"
1100mm
21 5/8"
550mm
10 1/4"
261mm
32 5/8"
830mm
∅ 7 1/8"
182mm

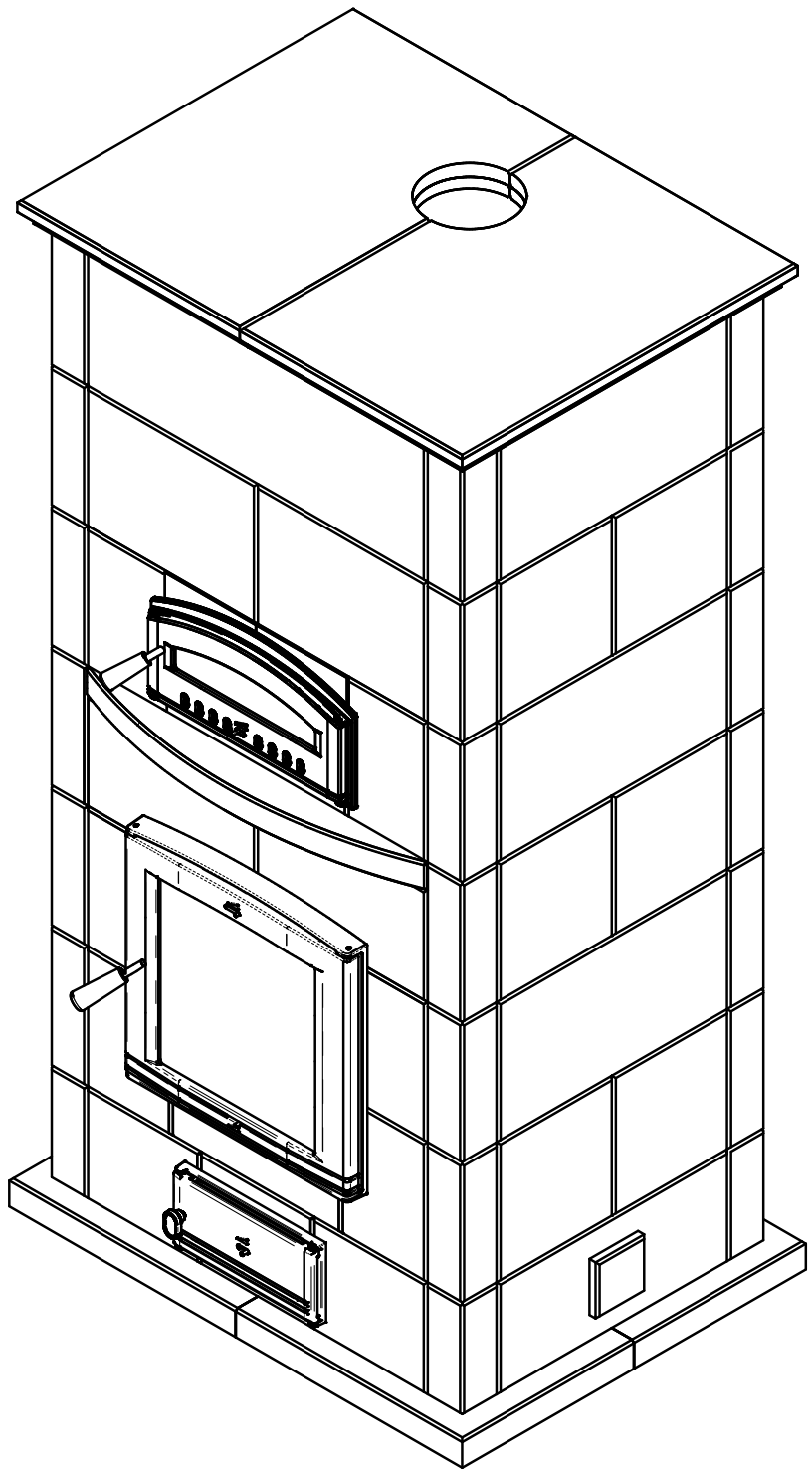

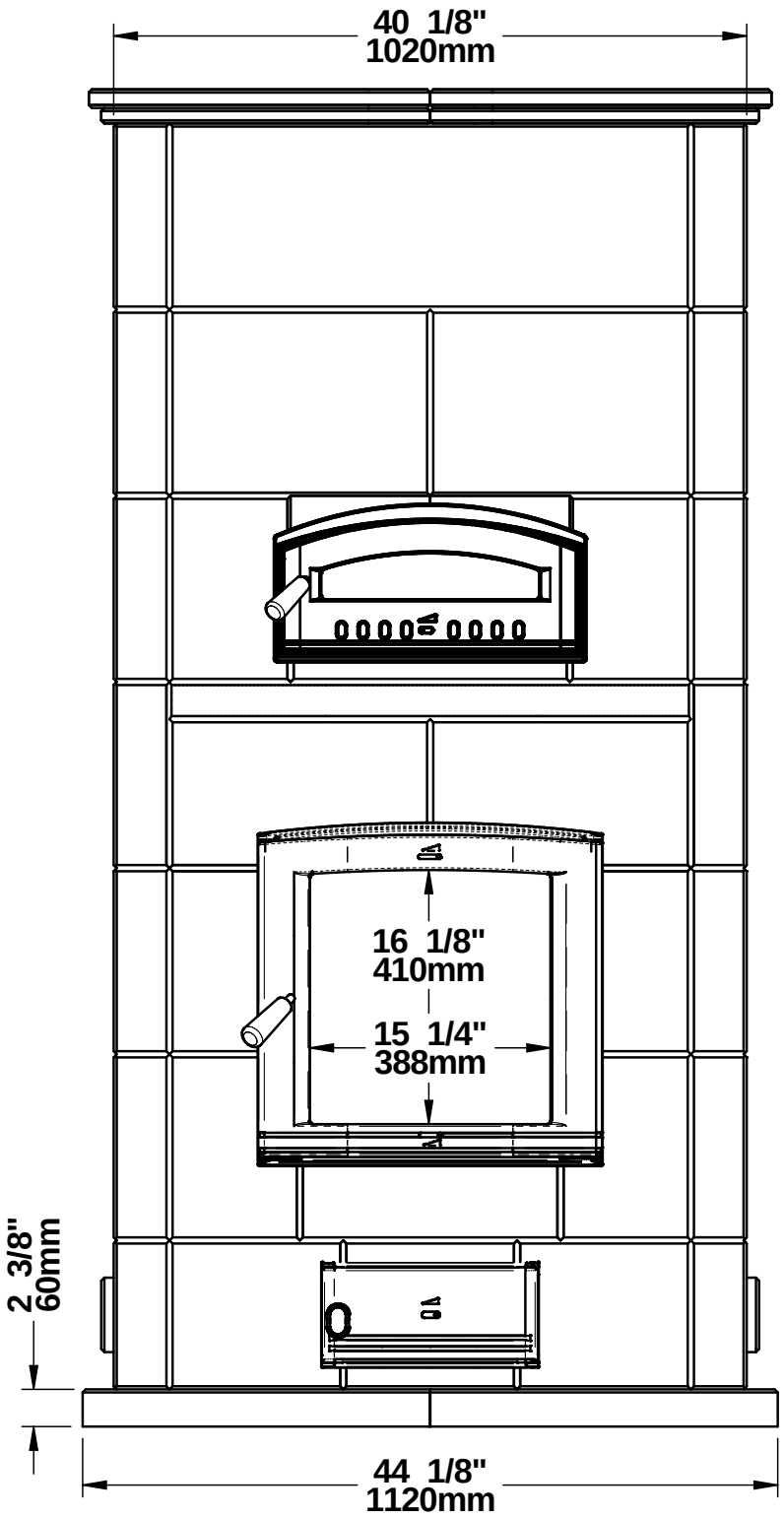
40 1/8"
1020mm
16 1/8"
410mm
15 1/4"
388mm
2 3/8"
60mm
44 1/8"
1120mm

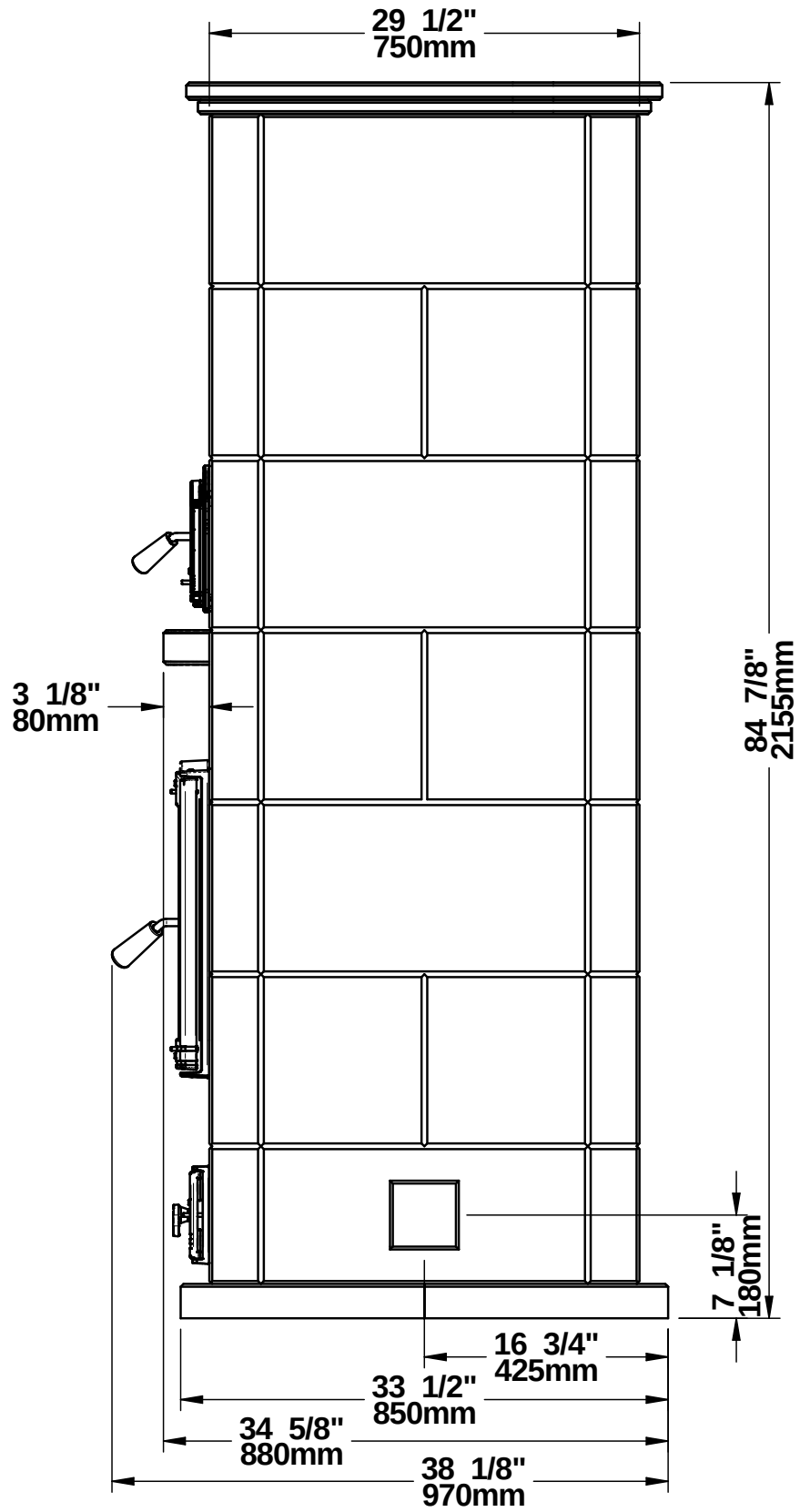
29 1/2"
750mm
3 1/8"
80mm
84 7/8"
2155mm
7 1/8"
180mm
16 3/4"
425mm
33 1/2"
850mm
34 5/8"
880mm
38 1/8"
970mm

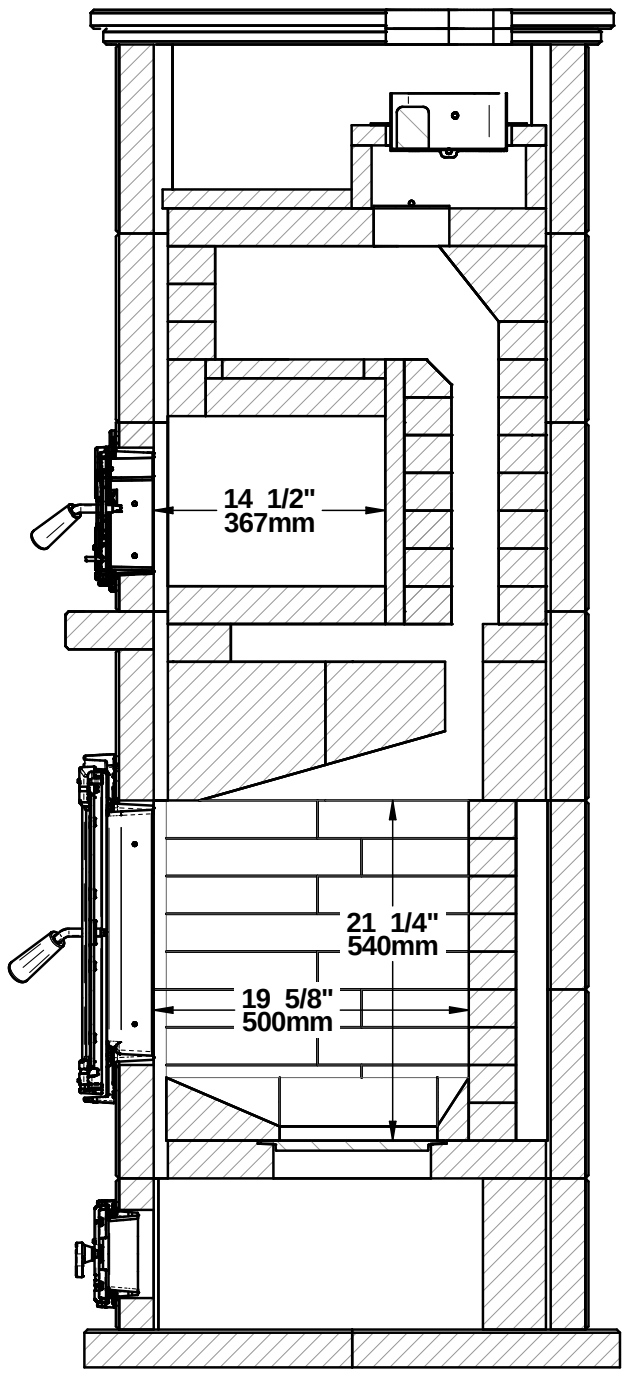
14 1/2"
367mm
21 1/4"
540mm
19 5/8"
500mm

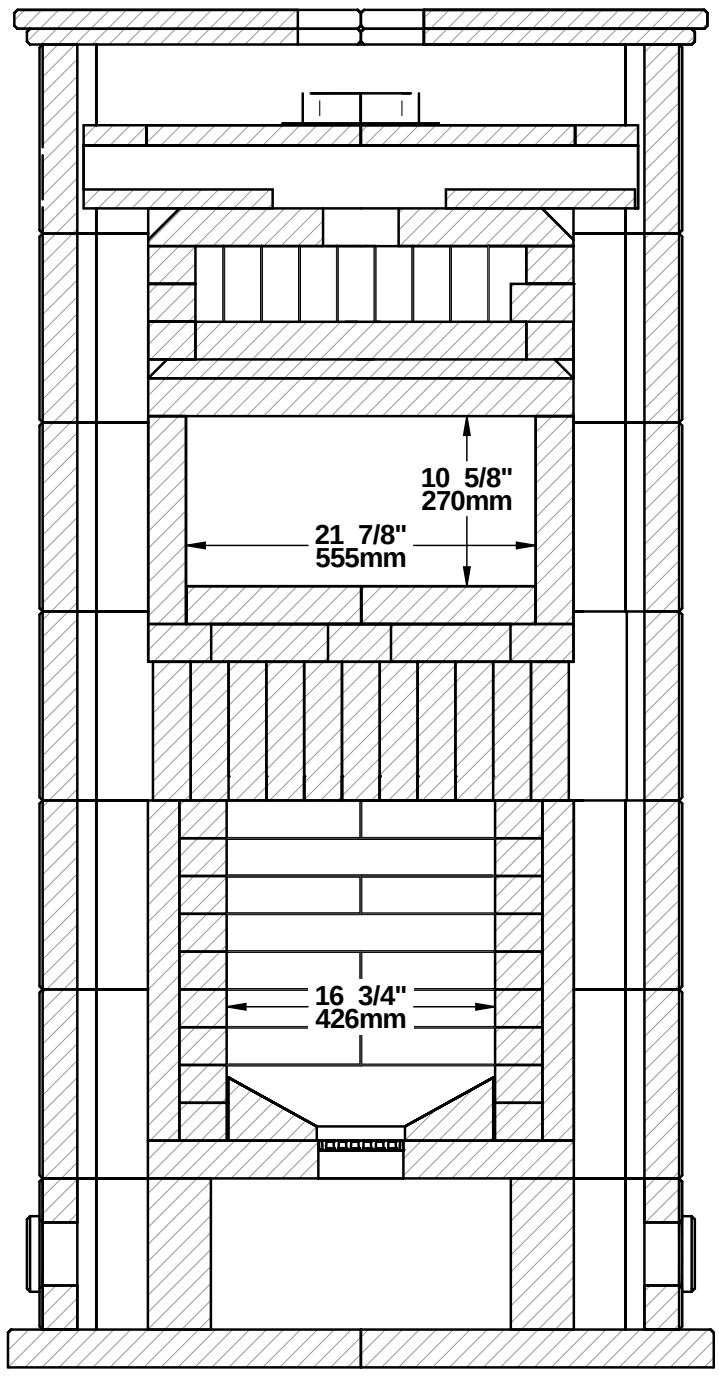
10 5/8"
270mm
21 7/8"
555mm
16 3/4"
426mm

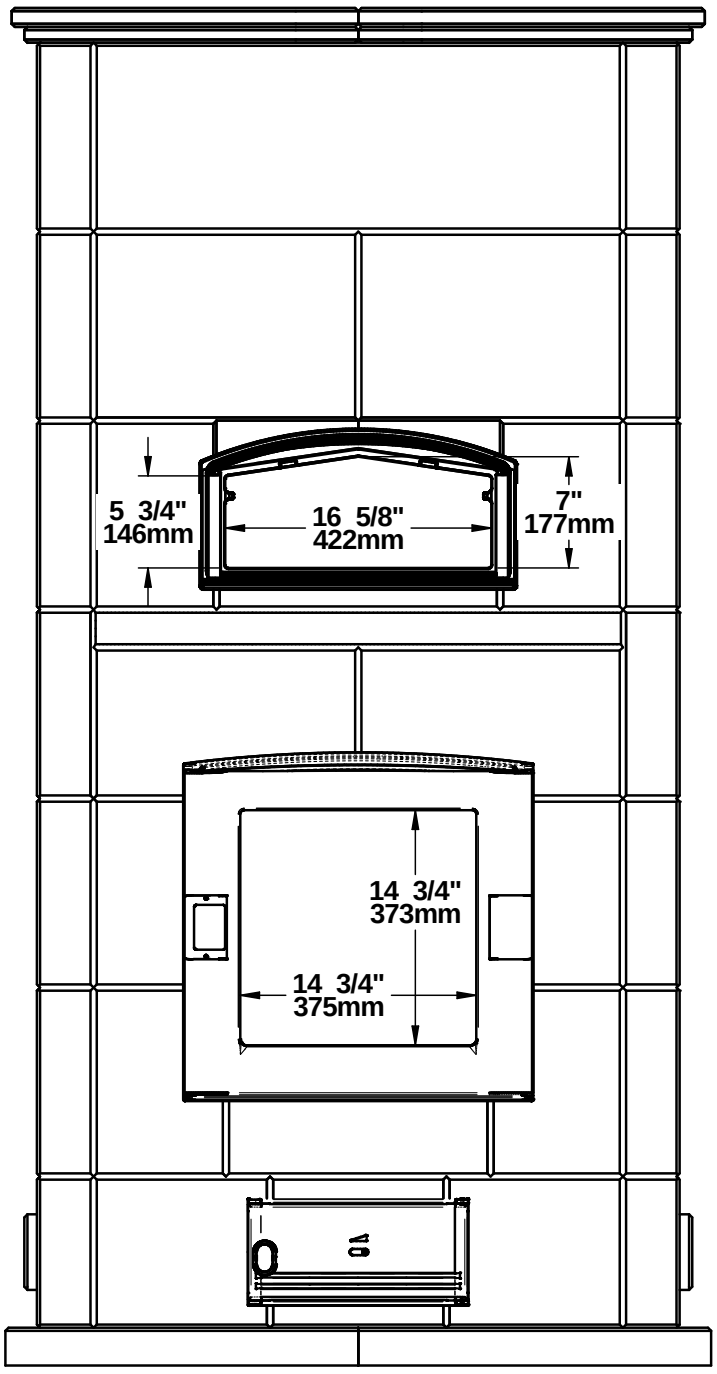
5 3/4"
146mm
16 5/8"
422mm
7"
177mm
14 3/4"
373mm
14 3/4"
375mm